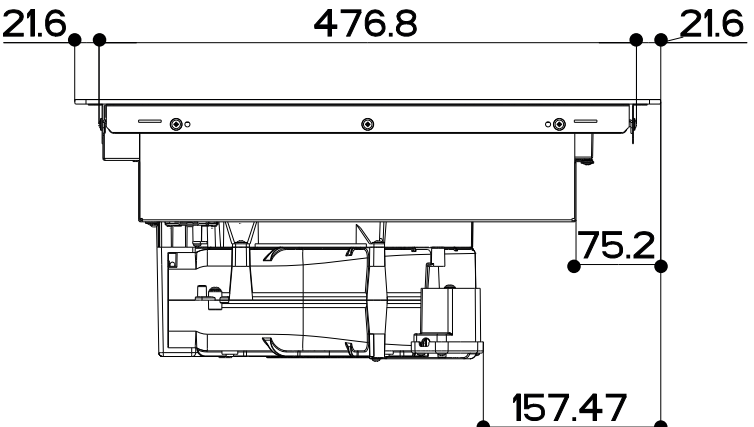
21.6
476.8
21.6
75.2
157.47

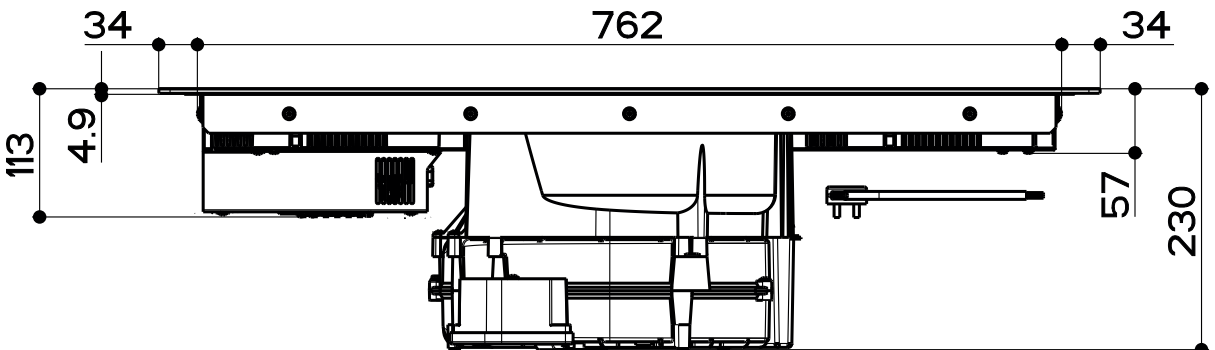
34
762
34
113
4.9
57
230